TD1870 Multifunction Calibrator

1. Summary

TD1870 multifunction calibrator is a wide-range, high-precision multifunction calibrator. It integrates ultra-precise DC and AC voltage and current sources, capable of generating high-performance DC voltage, DC current, DC power, as well as AC voltage, AC current, AC power, phase, and frequency. Additionally, it features resistance simulation, thermocouple and RTD simulation, and pulse output functions. It is specifically designed for calibrating 5½-digit and lower digital multimeters and other precision electrical measurement instruments.

2. Features

- DC voltage output: ± (0 ~ 1020 V),
- DC current output: ± (0 ~ 20.5 A)
- AC voltage output: 1 mV ~ 1020 V
- AC current output: 29 μA ~ 20.5 A
- Sine wave frequency: 10 Hz ~ 500 kHz
- Simulated DC resistance: 0 Ω ~ 1100 MΩ, continuously adjustable
- 2 MHz square wave frequency output
- U-I phase adjustment output
- AC/DC power output
- 8 types of thermocouple source and measurement (optional)
- 6 RTD outputs (optional)
- Multiple range value output modes
- Clamp meter calibration (optional)

3. Application

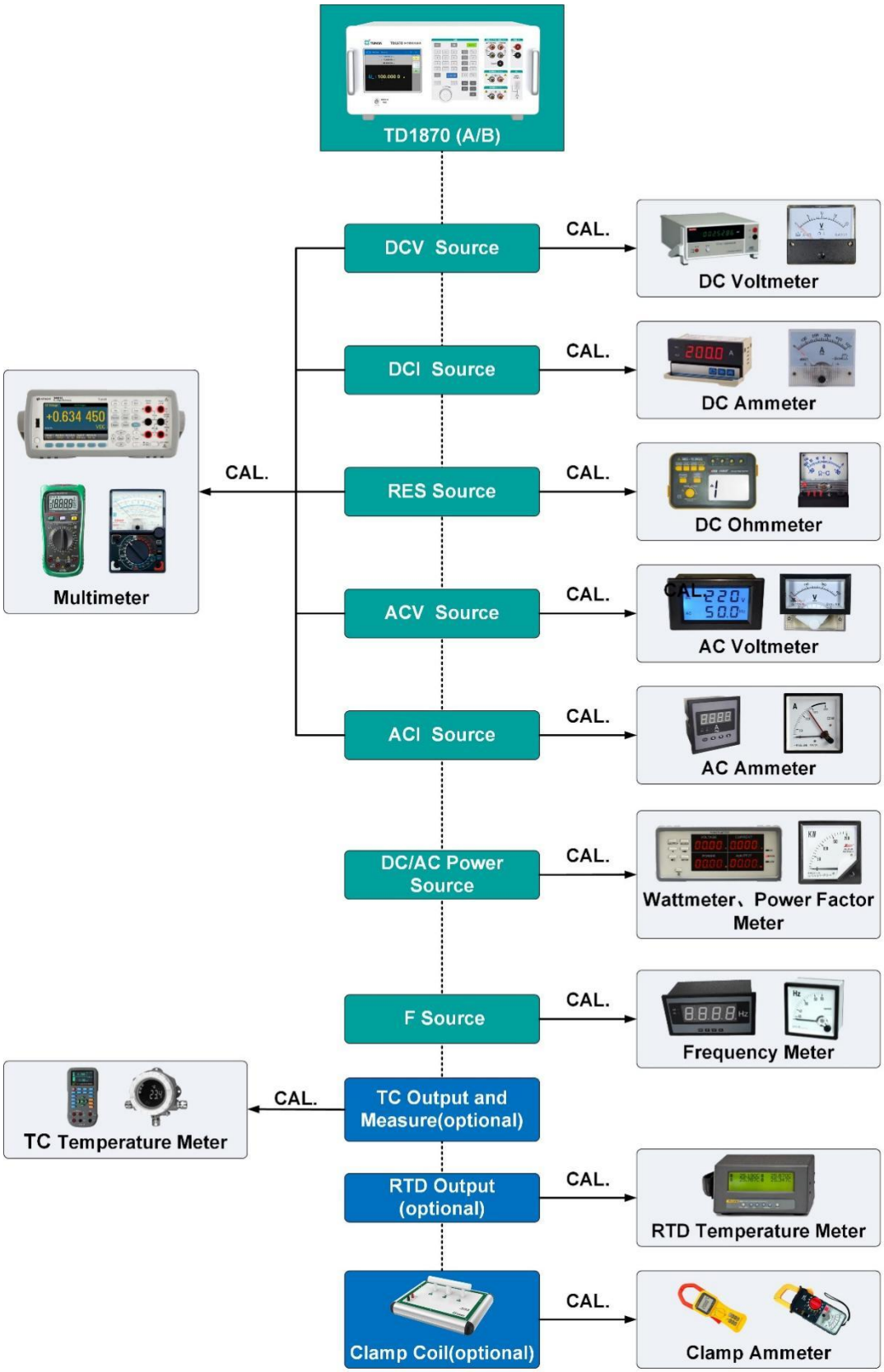

☆ Calibrate AC\DC electrical measuring instruments

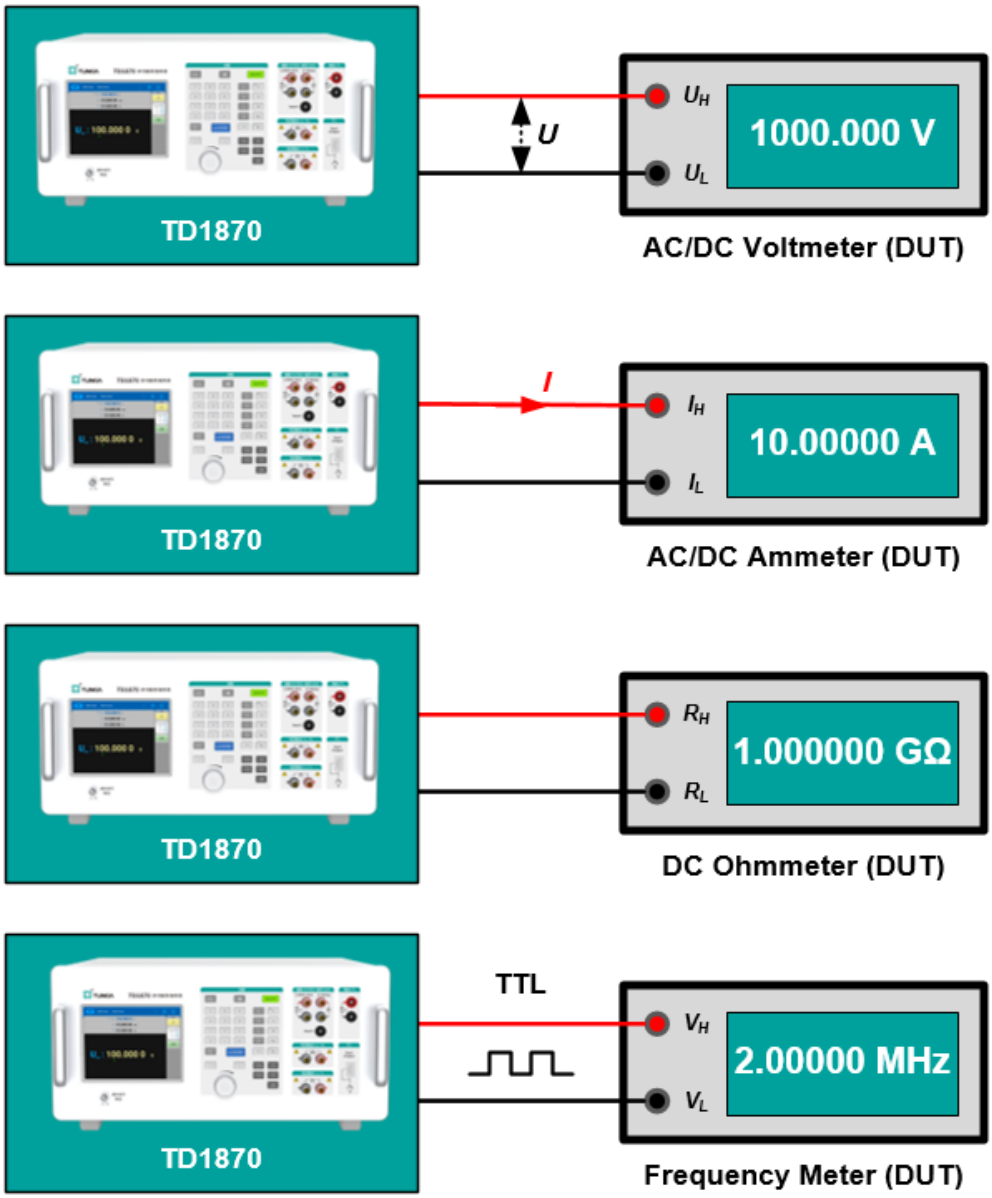

- **DCV Output**: ±(0 ~ 1020 V)
- **DCI Output**: ±(0 ~ 20.5 A)
- **ACV Output**: 1 mV ~ 1020 V, 10 Hz ~ 500 kHz
- **ACI Output**: 29 μA ~ 20.5 A, 10 Hz ~ 30 kHz
- **RES Output**: 0 Ω ~ 1100 MΩ, continuously adjustable
- **F Output**: 1 Hz ~ 2 MHz
- It is suitable for calibrating 5.5-digit and below digital multimeters, class 0.02 and below DC voltmeters, class 0.05 and below DC ammeters and DC resistance meters, class 0.1 and below AC voltmeters and ammeters, and class 0.01 and below frequency meters.

☆ Calibrate AC\DC power meters

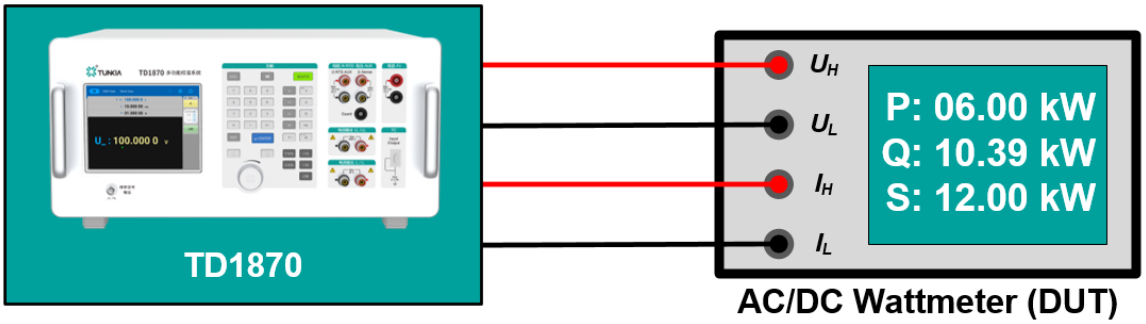

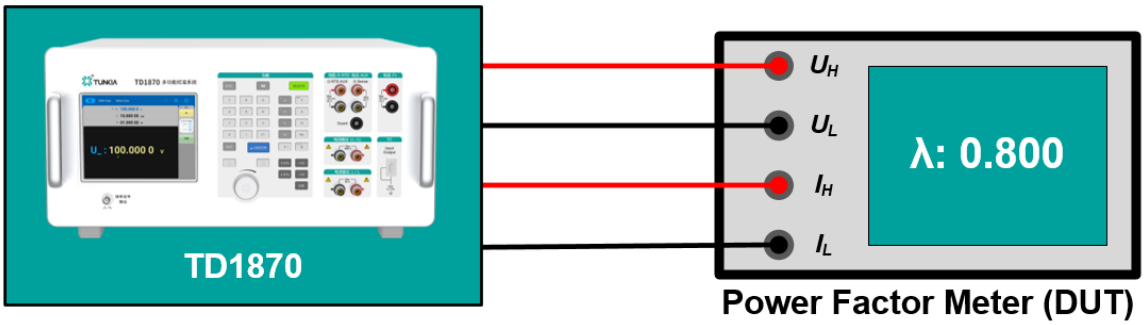

- **Application:** A virtual power standard source consisting of independent outputs of AC/DC voltage (DCV/ACV) and AC/DC current (DCI/ACI) with adjustable phase, suitable for calibrating conventional U-I measurement AC/DC power meters.

- Applicable to calibrate DC power meters of class 0.05 and below, active power meters of class 0.1 and below, reactive power meters, apparent power meters, power frequency phase meters, power factor meters, and power analyzers.

☆ Calibrate temperature meters(optional)

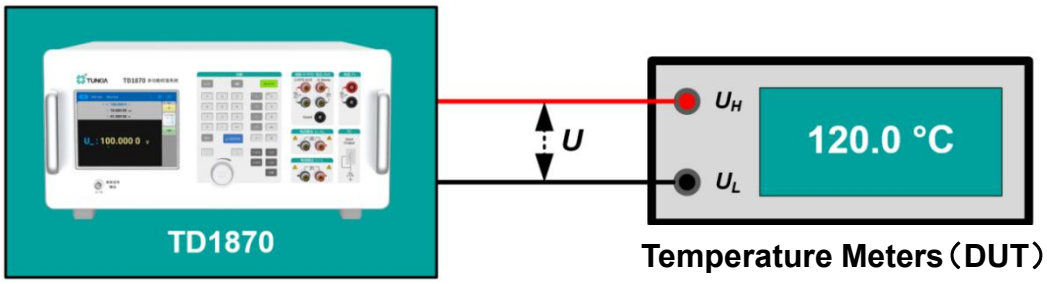

- Type of thermocouple (TC) output and measurement: B, E, J, K, N, R, S, T (8 types)
- Type of thermal resistance (RTD) output: Pt385-100Ω, Pt385-200Ω, Pt385-500Ω, Pt385-1000Ω, Cu50, Cu100 (6 types)

☆ Calibrate clamp ammeter (optional)

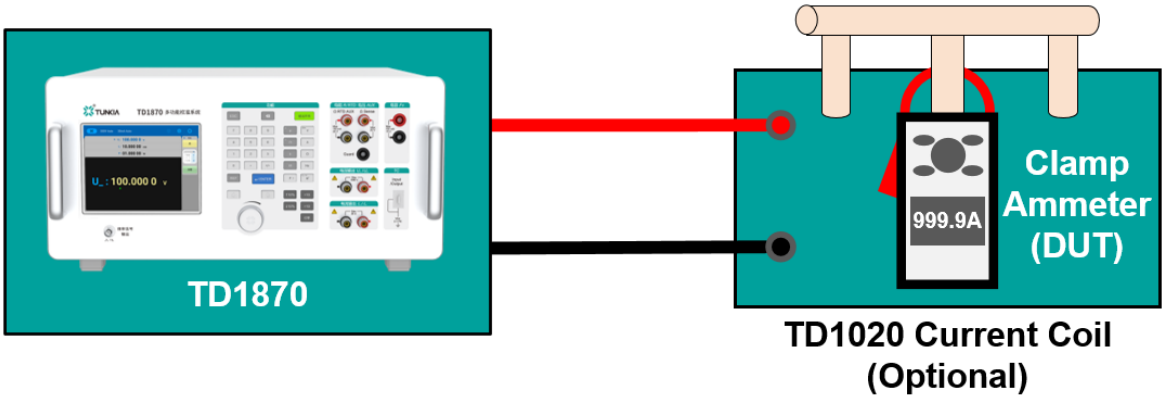

- Users can choose the TD1020 current coil (50 turns) and pass 20 A of AC and DC standard current to achieve a maximum equivalent current output of 1000 At, which is suitable for calibrating clamp ammeters or current clamps of lower accuracy class of class 1 and below.
- If you need to calibrate a clamp ammeter with higher accuracy, you can choose TUNKIA TD1050 clamp ammeter calibration device.

4. Panel Features

☆ Front panel

S/N	Description
1	**LCD touch color screen:** intuitive display of multiple power levels, touch operation, greatly improving the usability of the instrument.
2	**Key operation panel:** multiple value input and adjustment modes, greatly improving the convenience of instrument operation.
3	**Pulse frequency output terminal:** BNC female.
4	**Resistor/thermal resistor output terminal:** maximum voltage 20 V, maximum current 150 mA.
5	Capacitor output terminal (this function is not yet open).
6	**AC/DC voltage output terminal:** low thermal potential binding post with tellurium copper gold plating, maximum nominal voltage 1000 V.
7	**Thermocouple output terminal:** dedicated TC test connection socket.
8	**AC/DC current output terminal:** can be connected to Φ4 gun plug or U-shaped plug, maximum nominal current support 20 A.

☆ Rear\Side Panel

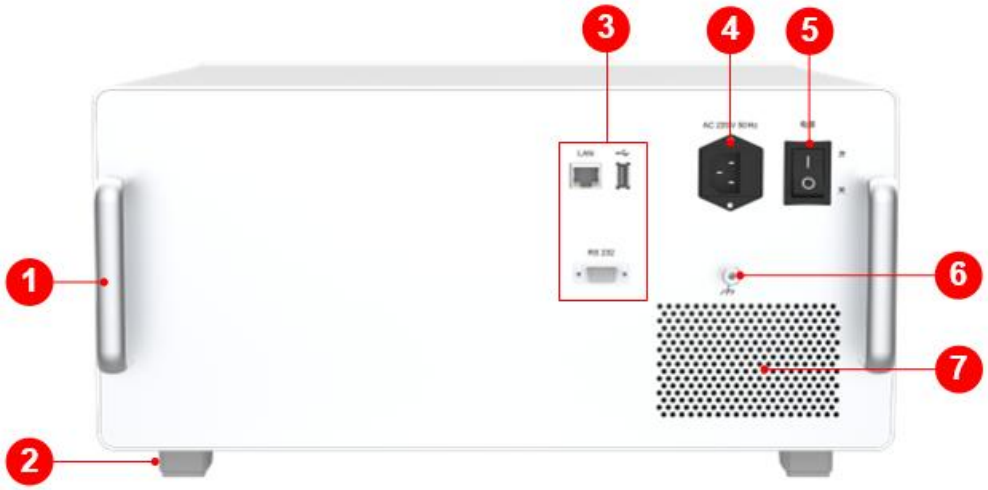

Rear Panel

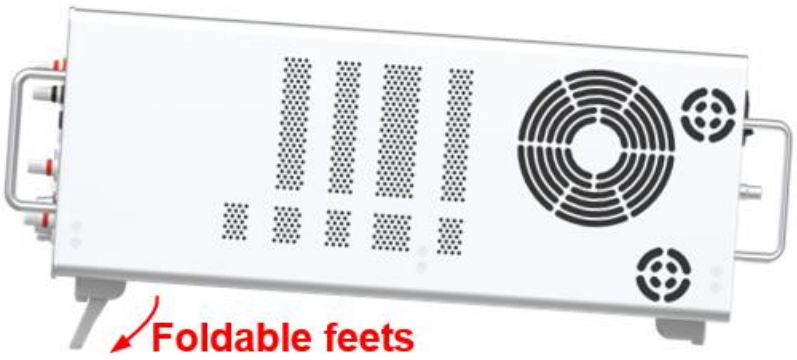

Side Panel

S/N	Description
1	**Handle:** The front and rear panels are each equipped with a pair of handles to facilitate users to move or carry the instrument. They are also used to protect the various connection terminals or interfaces on the front and rear panels of the instrument from being bumped or damaged during movement or transportation.
2	**Foldable rubber feet:** Raise the instrument slightly at an angle to obtain the best operating and reading viewing angle.
3	**Communication interface:** including USB/LAN/RS232, which can be connected to a computer to facilitate users to program and control the output of the multi-function standard source.
4	**Power input interface:** AC 220V power input interface with fuse.

5	Power switch
6	**Casing ground interface:** The instrument should be grounded before operation to ensure electrical safety.
7	**Instrument heat dissipation port:** Heat is dissipated through the built-in radiator and fan to ensure the stability of the internal temperature of the instrument and improve measurement accuracy.

5. Characteristics

☆ Wide output range

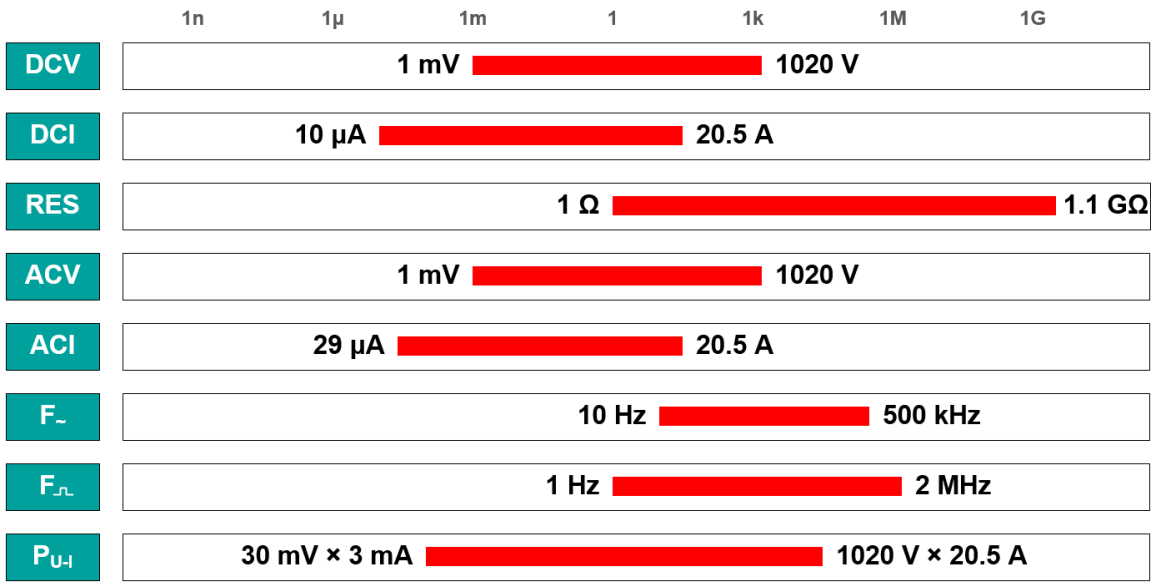

- **Solution Value:** The multifunctional standard source output range of TD1870 covers the working range of electrical measuring instruments such as 5.5-digit and below digital multimeters, and can be calibrated directly using the standard source method.

☆ High stability and accuracy

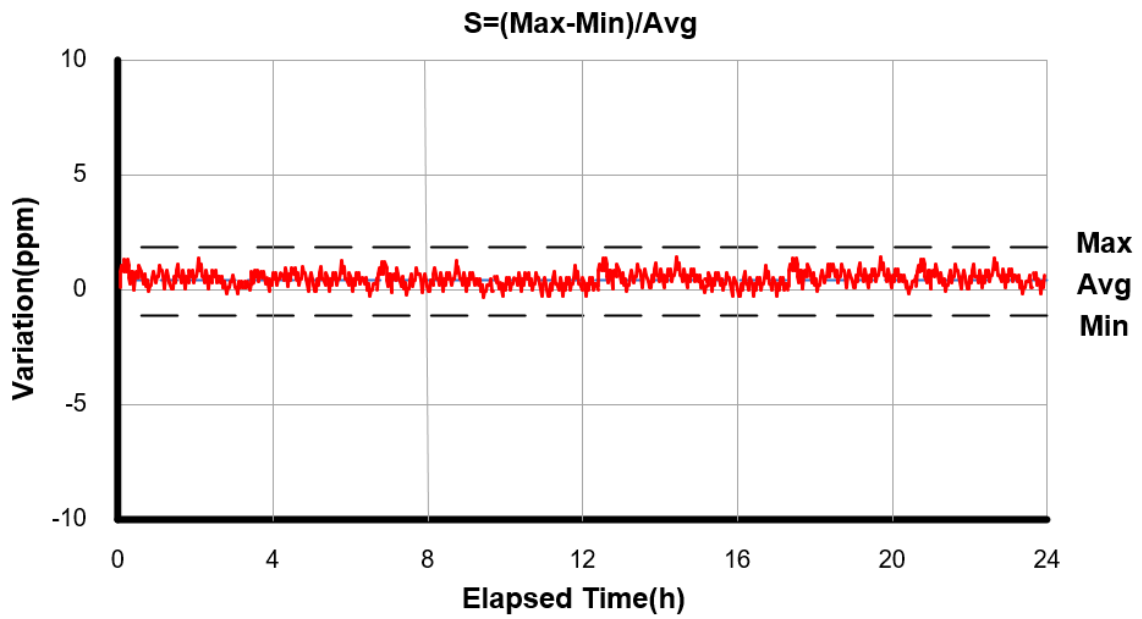

- The DC voltage stability is up to 5 ppm/24h.

☆ 4-terminals Simulated DC resistance

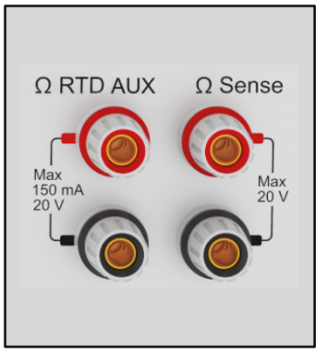

Figure(a) 4 terminals

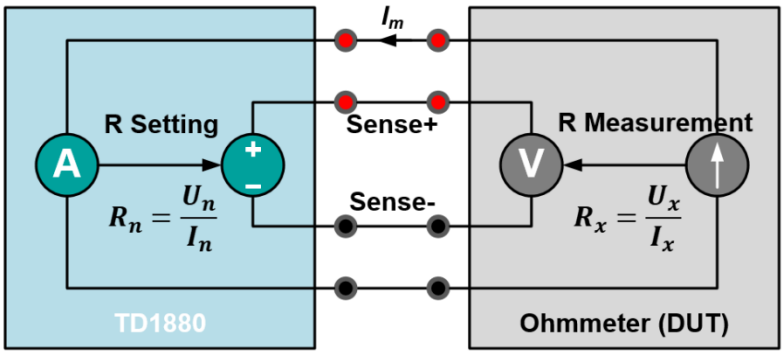

Figure(b) Wiring Diagram

- 2-terminals and 4-terminals resistance wiring mode. When calibrating the low value resistance, the four wire system wiring mode can effectively eliminate the measurement error caused by the resistance of the test lead and improve the measurement accuracy.
- **Advantages:** Compared with the standard physical resistance box, the analog resistance output has the following characteristics:

  ☑ Continuously adjustable, with better adjustment fineness and sensitivity

  ☑ Smaller size and lighter weight

  ☑ No influence of transfer switch error, residual resistance error and contact resistance error.

☆ Safety protection function

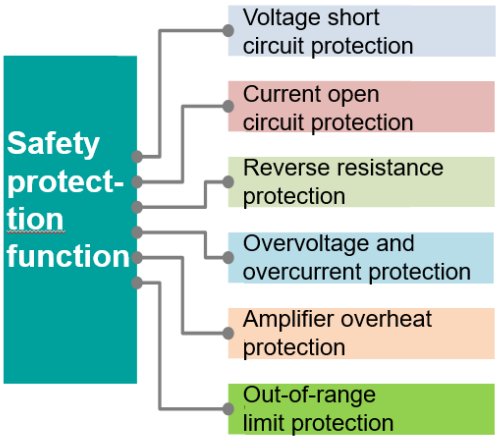

Figure (a) Safety Protection Function

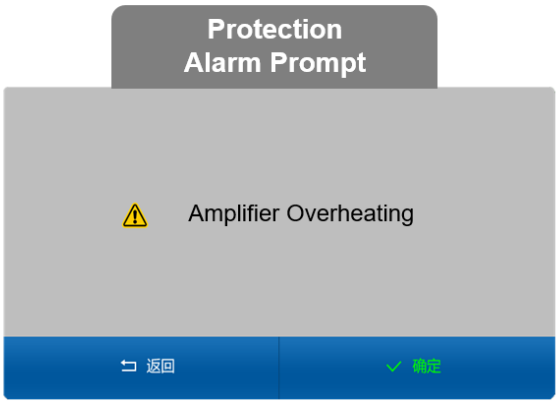

Figure (b) Protection Alarm Prompt Interface

- Accidental voltage or current applied to the output of the multifunction calibrator may cause serious damage to the built-in components of the instrument, resulting in expensive repair costs and a decrease in the use rate of the instrument during the repair period.
- TD1870 has a complete safety circuit protection function. When the self-protection is triggered, the device will alarm and pop up an alarm prompt on the screen interface. After the user checks and confirms and eliminates the fault, it only takes one button to reset the protection to return to normal.

☆ Easy to operate

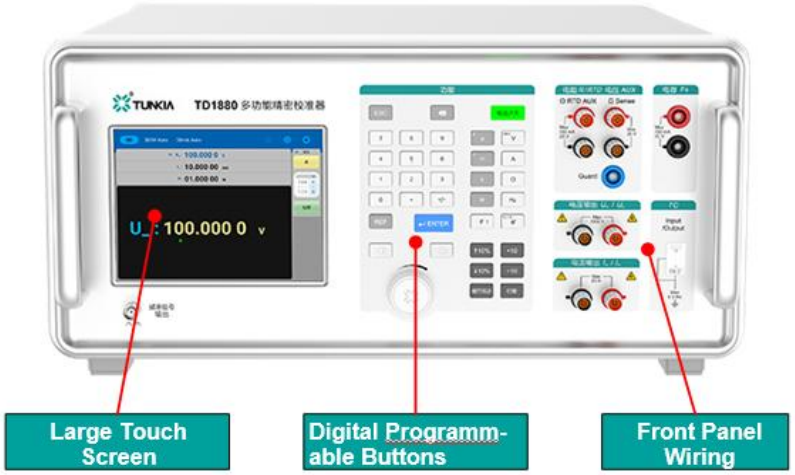

- **Large-size touch screen:** full color, high screen brightness, clear picture quality, support touch operation, comprehensive functions, simple and fast.
- **Digital programmable buttons:** can realize multiple input methods such as fixed-point output, rotary encoder, and step adjustment, which is convenient and fast to operate.
- **Front panel wiring:** It is convenient for users to replace the current and voltage test leads when checking the meter.
- **Solution value:** This combined operation mode effectively improves the convenience of operation to adapt to diverse application scenarios.

☆ Multiple output\adjustment methods

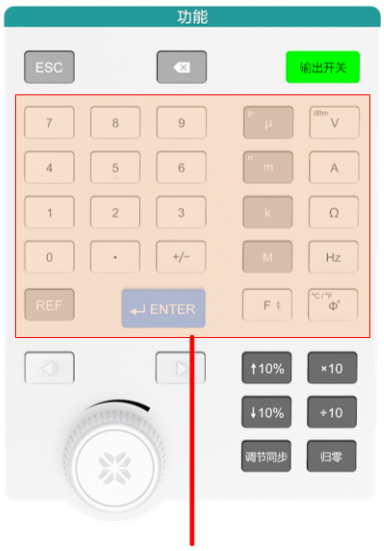

Figure (a) Keypad

Figure (b) Touch Screen Output

- The instrument has a "**fixed-point output**" mode. You can directly set the required output value by pressing the digital buttons on the console or clicking the touch screen. The instrument will automatically switch to the optimal range output, making it very convenient to calibrate digital instruments.

- Especially when setting the AC power output, you can directly input the voltage and current amplitude, frequency and phase angle at the same time (as shown in Figure b above), which is very convenient to use.

☆ Multiple output\adjustment methods

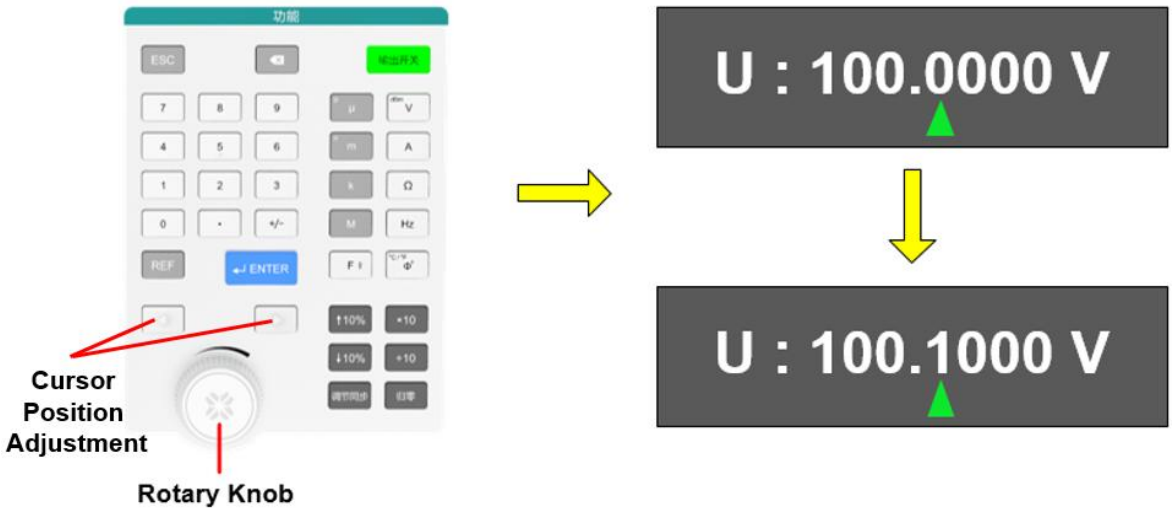

- The instrument is equipped with a "**Rotary Knob**" on the front panel. Click the left and right arrow keys to adjust the cursor position, and then rotate clockwise or counterclockwise to increase or decrease

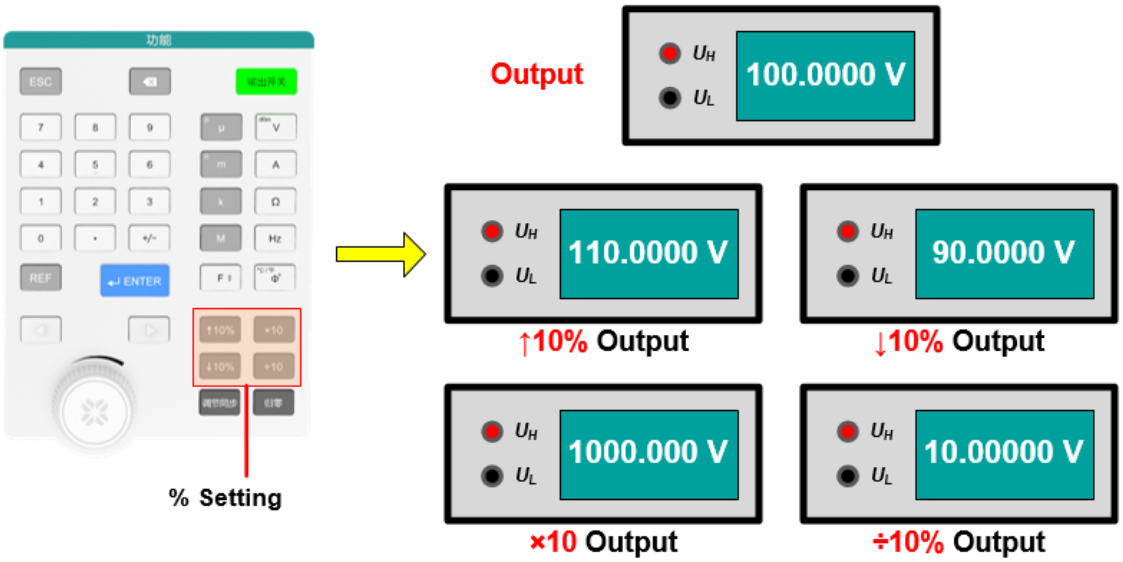

- Use the key ↑10%, ↓10%, ×10, ÷10 on the front panel, can realize the adjustment of the quantity value, and can also be used to perform the relevant test of linearity.

☆ Special test software (optional)

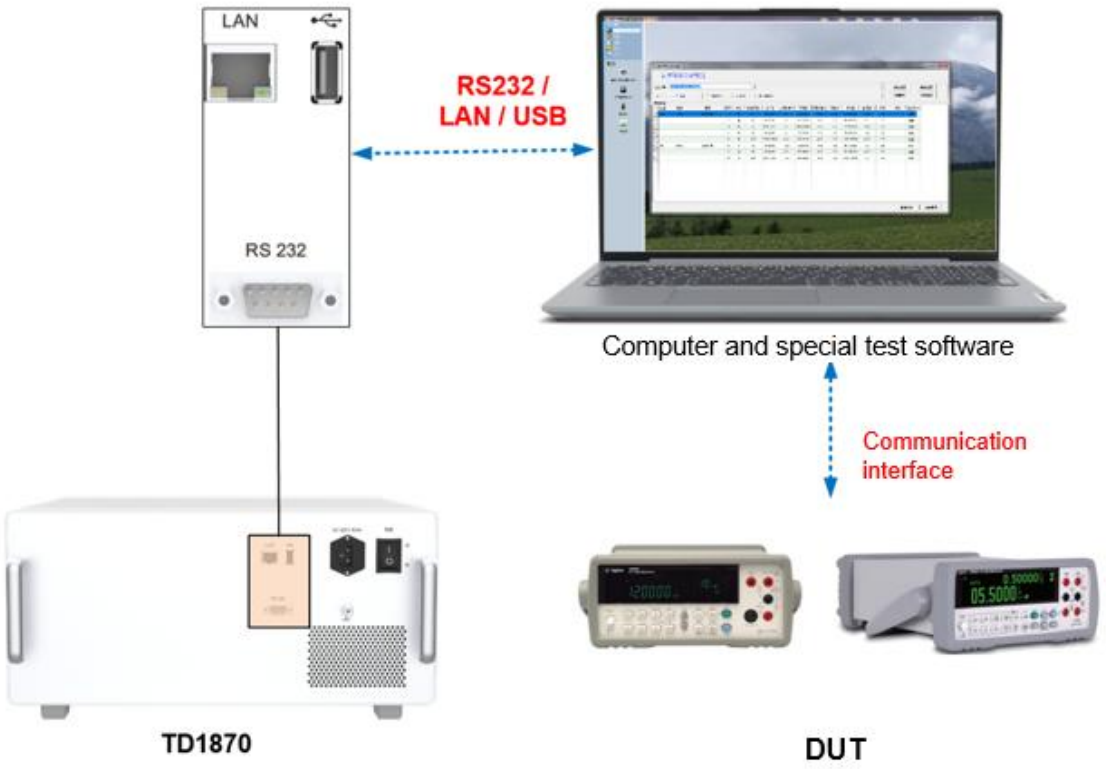

- The workload of calibration of digital meters and analog meters is huge, especially for digital multimeters. There are many items that need to be calibrated and the measurement standards involved are also relatively complicated. The traditional method of manual measurement has a large human interference factor, the reliability of the calibration results is not high enough, and the efficiency of calibration is low.
- Users can choose the dedicated calibration software independently developed by TUNKIA. The software protocol library is compatible with various specifications of the tested instruments, supports full-automatic or semi-automatic calibration of the tested equipment, raw data recording, analysis, management and customized template report export. Compared with traditional manual calibration, it has obvious advantages, effectively solves the various inconveniences of manual calibration, and significantly improves work efficiency.

  (Note: During full-automatic calibration, the tested equipment should have communication functions and open communication protocols to enable data reading)
- The software functions can be customized according to customer needs, and subsequent software upgrades to add new procedure testing requirements are supported.

6. Specifications

6.1 DC Voltage Output

Range	Output Range	Accuracy (k=2) (T_{cal}±5°C)		Stability (T_{cal}±1°C)	Resolution	Max Burden [Source internal resistance]
		ppm*output + μV				
		90 days	1 year	24 hours		
300 mV	0~330.0000 mV	50 + 3	60 + 3	5 + 1	100 nV	[60 Ω]
3 V	0~3.300000 V	40 + 5	50 + 5	4 + 3	1 μV	20 mA
30 V	0~33.00000 V	40 + 50	50 + 50	4 + 30	10 μV	15 mA
300 V	30.0000 V~330.0000 V	45 + 500	55 + 500	4.5 + 300	100 μV	10 mA
1000 V	100.000 V~1020.000 V	45 + 1500	55 + 1500	4.5 + 900	1 mV	10 mA

- Manual or automatic range switch.
- Short-circuit and overload protection.

6.2 DC Current Output

Range	Output Range	Accuracy (k=2)(T_{cal}±5°C) ppm*output + μA		Resolution	Compliance Voltage (V)	Max Inductive Load
		90 days	1 year			
300 μA	0~330.000 μA	112 + 0.02	140 + 0.02	1 nA	11 V	400 μH
3 mA	0~3.30000 mA	72 + 0.04	90 + 0.04	10 nA	11 V	
30 mA	0~33.0000 mA	72 + 0.25	90 + 0.25	100 nA	9 V	
300 mA	0~330.000 mA	72 + 2.5	90 + 2.5	1 μA	7 V	
1 A	0~1.10000 A	200 + 44	250 + 40	10 μA	6 V	
3 A	1.00000 A~3.30000 A	240 + 44	300 + 40	10 μA	6 V	
20 A	3.0000 A~20.5000 A	480 + 500	600 + 500	100 μA	4 V	

- Manual or automatic range switch.
- Open-circuit and overload protection.
- Supports continuous and long-term output of current under full range.

6.3 Simulated DC resistance

Range	Output Range[1]	Accuracy(k=2) (T_{cal}±5°C) ppm*output + Ω		Resolution	Allowable Current
		90 days	1 year		
10Ω	0 Ω~11.00000 Ω	80 + 0.01	100 + 0.01	10 μΩ	1 mA~150 mA
30Ω	10.00000 Ω~33.00000 Ω	80 + 0.015	100 + 0.015	10 μΩ	1 mA~150 mA
100Ω	30.0000 Ω~110.0000 Ω	64 + 0.015	80 + 0.015	100 μΩ	1 mA~80 mA
300Ω	100.0000 Ω~330.0000 Ω	64 + 0.02	80 + 0.02	100 μΩ	1 mA~40 mA
1 kΩ	0.300000 kΩ~1.100000 kΩ	64 + 0.02	80 + 0.02	1 mΩ	1 mA~20 mA
3 kΩ	1.000000 kΩ~3.300000 kΩ	64 + 0.2	80 + 0.2	1 mΩ	0.1 mA~6 mA
10 kΩ	3.00000 kΩ~11.00000 kΩ	64 + 0.1	80 + 0.1	10 mΩ	0.1 mA~2 mA
30 kΩ	10.00000 kΩ~33.00000 kΩ	64 + 1	80 + 1	10 mΩ	10 μA~0.6 mA
100 kΩ	30.0000 kΩ~110.0000 kΩ	80 + 1	100 + 1	100 mΩ	10 μA~0.2 mA
300 kΩ	100.0000 kΩ~330.0000 kΩ	80 + 10	100 + 10	100 mΩ	1 μA~60 μA
1 MΩ	0.300000 MΩ~1.100000 MΩ	104 + 10	130 + 10	1 Ω	1 μA~20 μA
3 MΩ	1.000000 MΩ~3.300000 MΩ	104 + 150	130 + 150	1 Ω	0.25 μA~6 μA
10 MΩ	3.00000 MΩ~11.00000 MΩ	400 + 250	500 + 250	10 Ω	0.25 μA~2 μA
30 MΩ	10.00000 MΩ~33.00000 MΩ	650 + 2500	800 + 2500	10 Ω	25 nA~600 nA
100 MΩ	30.0000 MΩ~110.0000 MΩ	3600 + 3000	4500 + 3000	100 Ω	25 nA~200 nA
300 MΩ	100.0000 MΩ~330.0000 MΩ	3600 + 100000	4500 + 100000	100 Ω	2.5 nA~60 nA
1 GΩ	300.000 MΩ~1100.000 MΩ	11000 + 480000	14000 + 480000	1 kΩ	1 nA~20 nA
Note: [1] Output is continuously adjustable.					

- Manual or automatic range switch.
- Over-current and reverse connection protection.

6.4 AC Voltage Output

Range	Output Range	Frequency (Hz)	Accuracy(k=2), (T_{cal}±5°C) %*output + μV		Resolution	Max Burden [Source internal resistance]
			90 days	1 year		
30 mV	1.0000 mV~ 33.0000 mV	10≤F≤45	0.10 + 20	0.12 + 20	100 nV	[10 Ω]
		45<F≤10k	0.08 + 20	0.10 + 20		
		10k<F≤20k	0.12 + 20	0.15 + 20		
		20k<F≤50k	0.16 + 20	0.20 + 20		
		50k<F≤100k	0.30 + 33	0.35 + 33		
		100k<F≤500k	0.72 + 60	0.90 + 60		
300 mV	30.000 mV~ 330.000 mV	10≤F≤45	0.04 + 18	0.05 + 18	1 μV	[60 Ω]
		45<F≤10k	0.024 + 18	0.03 + 18		
		10k<F≤20k	0.048 + 18	0.06 + 18		
		20k<F≤50k	0.064 + 30	0.08 + 40		
		50k<F≤100k	0.12 + 120	0.15 + 120		
		100k<F≤500k	0.28 + 300	0.35 + 300		
3 V	0.30000 V~ 3.30000 V	10≤F≤45	0.04 + 55	0.05 + 55	10μV	20 mA
		45<F≤10k	0.016 + 55	0.02 + 55		
		10k<F≤20k	0.048 + 55	0.06 + 55		
		20k<F≤50k	0.064 + 55	0.08 + 55		
		50k<F≤100k	0.12 + 180	0.15 + 180		
		100k<F≤500k	0.32 + 800	0.40 + 800		
30 V	3.0000 V~ 33.0000 V	10≤F≤45	0.04 + 750	0.05 + 750	100 μV	15 mA
		45<F≤10k	0.024 + 550	0.03 + 550		
		10k<F≤20k	0.048 + 550	0.06 + 550		
		20k<F≤50k	0.064 + 550	0.08 + 550		
		50k<F≤100k	0.16 + 1800	0.20 + 1800		
300 V	30.000 V~ 330.000 V	45≤F≤1k	0.024 + 2500	0.03 + 2500	1 mV	30 mA [1]
		1k<F≤10k	0.032 + 8000	0.04 + 8000		

Range	Output Range	Frequency (Hz)	Accuracy(k=2), (T_{cal}±5°C) %*output + μV		Resolution	Max Burden [Source internal resistance]
			90 days	1 year		
		10k<F≤20k	0.048 + 8000	0.06 + 8000		
		20k<F≤50k	0.096 + 9000	0.12 + 9000		
		50k<F≤100k	0.192 + 80000	0.24 + 80000		
1000 V	300.00 V~ 1020.00 V	45≤F≤1k	0.024 + 15000	0.03 + 15000	10 mV	8 mA [2]
		1k<F≤5k	0.032 + 15000	0.04 + 15000		
		5k<F≤10k	0.032 + 15000	0.04 + 15000		

Note: [1] When the output frequency ≤ 3kHz, the maximum load is 30 mA; When the output frequency >3kHz, the maximum load is 5 mA.

[2] When the output frequency ≤ 3kHz, the maximum load is 8 mA; When the output frequency >3kHz, the maximum load is 3 mA.

- Manual or automatic range switch.
- Short-circuit and overload protection.

6.5 AC Current Output

Range	Output Range	Frequency (Hz)	Accuracy (k=2) (T_{cal}±5°C) %*output + µA		Resolution	Compliance Voltage (rms)	Max Inductive Load
			90 days	1 year			
300 µA	29.000 µA~ 330.000 µA	10≤F≤20	0.128 + 0.1	0.16 + 0.1	1 nA	7 V	200µH
		20<F≤45	0.096 + 0.1	0.12 + 0.1			
		45<F≤1k	0.064 + 0.1	0.08 + 0.1			
		1k<F≤5k	0.128 + 0.1	0.16 + 0.1			
		5k<F≤10k	0.24 + 0.2	0.3 + 0.2			
		10k<F≤30k	0.96 + 0.4	1.2 + 0.4			
3mA	0.30000 mA~ 3.30000 mA	10≤F≤20	0.128 + 0.1	0.16 + 0.1	10 nA	7 V	200µH
		20<F≤45	0.096 + 0.1	0.12 + 0.1			
		45<F≤1k	0.064 + 0.1	0.08 + 0.1			
		1k<F≤5k	0.128 + 0.2	0.16 + 0.2			
		5k<F≤10k	0.24 + 0.3	0.3 + 0.3			
		10k<F≤30k	0.96 + 0.5	1.2 + 0.5			
30 mA	3.0000 mA~ 33.0000 mA	10≤F≤20	0.096 + 2	0.12 + 2	100 nA	7 V	50µH
		20<F≤45	0.064 + 2	0.08 + 2			
		45<F≤1k	0.032 + 2	0.04 + 2			
		1k<F≤5k	0.064 + 2	0.06 + 2			
		5k<F≤10k	0.08 + 3	0.1 + 3			
		10k<F≤30k	0.24 + 4	0.3 + 4			
300 mA	30.000 mA~ 330.000 mA	10≤F≤20	0.096 + 20	0.12 + 20	1 µA	5 V	50µH
		20<F≤45	0.064 + 20	0.08 + 20			
		45<F≤1k	0.032 + 20	0.04 + 20			
		1k<F≤5k	0.048 + 40	0.06 + 40			
		5k<F≤10k	0.08 + 100	0.1 + 100			
		10k<F≤30k	0.24 + 200	0.3 + 200			
1 A	0.10000 A~ 1.10000 A	10≤F≤45	0.096 + 100	0.12 + 100	10µA	5 V	2.5µH
		45<F≤1k	0.032 + 80	0.04 + 80			

Range	Output Range	Frequency (Hz)	Accuracy (k=2) (T_{cal}±5°C) %*output + μA		Resolution	Compliance Voltage (rms)	Max Inductive Load
			90 days	1 year			
		1k<F≤5k	0.048 + 500	0.06 + 500			
		5k<F≤10k	0.08 + 1000	0.1 + 1000			
3 A	1.00000 A~ 3.30000 A	10≤F≤45	0.096 + 100	0.12 + 100	10μA	4 V	2.5μH
		45<F≤1k	0.032 + 80	0.04 + 80			
		1k<F≤5k	0.048 + 500	0.06 + 500			
		5k<F≤10k	0.08 + 2000	0.1 + 2000			
20 A	3.0000 A~ 20.5000 A	45≤F≤100	0.048 + 1500	0.06 + 1500	100μA	3 V	1μH
		100<F≤1k	0.064 + 1500	0.08 + 1500			
		1k<F≤5k	0.096 + 3000	0.12 + 3000			

- Manual or automatic range switch.
- Open-circuit and overload protection.
- Supports continuous and long-term output of current under full range.

6.6 Sinusoidal Wave Frequency Output

Range	Resolution	Accuracy (k=2) (T_{cal}±5°C)
10.00000 Hz ≤ F ≤ 99.99999 Hz	10 μHz	0.005%
100.0000 Hz ≤ F ≤ 999.9999 Hz	0.1 mHz	0.005%
1.000000 kHz ≤ F ≤ 9.999999 kHz	1 mHz	0.005%
10.00000 kHz ≤ F ≤ 99.99999 kHz	10 mHz	0.005%
100.0000 kHz ≤ F ≤ 500.0000 kHz	0.1 Hz	0.005%

6.7 Phase and Power Factor Output

Phase		Accuracy(k=2)(T_{cal}±5°C)					
		10~65Hz	65~500Hz	500~1kHz	1k~5kHz	5k~10kHz	10k~30kHz
φ		0.15°	0.8°	1.5°	5°	8°	12°
phase (φ)	Power factor (λ)	Power accuracy caused by phase[3]					
		10~65Hz	65~500Hz	500~1kHz	1k~5kHz	5k~10kHz	10~65Hz
0°	1.00000	0.000%	0.010%	0.034%	0.381%	0.973%	0°
10°	0.98481	0.047%	0.256%	0.496%	1.917%	3.427%	10°
20°	0.93969	0.096%	0.518%	0.987%	3.553%	6.039%	20°
30°	0.86603	0.151%	0.816%	1.546%	5.412%	9.008%	30°
40°	0.76604	0.220%	1.181%	2.231%	7.694%	12.651%	40°
50°	0.64279	0.312%	1.674%	3.154%	10.767%	17.559%	50°
60°	0.50000	0.454%	2.428%	4.568%	15.476%	25.079%	60°
70°	0.34202	0.720%	3.846%	7.226%	24.326%	39.221%	70°
80°	0.17365	1.485%	7.928%	14.880%	49.809%	79.902%	80°
90°	0.00000	—	—	—	—	—	90°

Note: [1] Phase resolution: 0.001°;

[2] Power factor resolution: 0.000 01;

[3] Other power factor accuracy calculation formula: $U_\lambda = [1 - \cos(\varphi + \Delta\varphi)/\cos\varphi] \times 100\%$

6.8 AC/DC Power Output

Frequency (Hz)	Voltage Range (U)	Current Range (I)	Phase Range (φ)	Power Factor Range[2] (λ)
DC	0~±1020 V	0~±20.5 A	—	—
10~45	30 mV~33 V	3 mA~3.3 A	0.000°~359.999°	-1~0~1
45~1k	30 mV~1020 V	3 mA~20.5 A	0.000°~359.999°	-1~0~1
1k~5k	3 V~1020 V	30 mA~3.3 A	0.000°~359.999°	-1~0~1
5k~10k	3 V~1020 V	30 mA~3.3 A	0.000°~359.999°	-1~0~1
10k~30k	3 V~330 V	30 mA~330 mA	0.000°~359.999°	-1~0~1

Note: [1] DC power output range: combination of DC voltage and DC current output.

[2] AC power output range: combination of AC voltage, AC current and phase regulation output. See the table for specific range.

[3] Please refer to the calculation formula for the technical indicators of AC and DC power measurement uncertainty: $U_P = \sqrt{{U_U}^2 + {U_I}^2 + {U_\lambda}^2}$, U_U is the accuracy of voltage measurement, U_I is the accuracy of current measurement, U_λ is the accuracy caused by power factor.

6.9 Pulse Frequency Output

Range [1]	Resolution	Accuracy(k=2) (T_{cal}±5°C) ppm*RD + μHz	Shake
1.000 00 Hz ≤ F ≤ 9.999 99 Hz	10 μHz	20 + 20	<20 ns
10.000 0 Hz ≤ F ≤ 99.999 9 Hz	0.1 mHz		
100.000 Hz ≤ F ≤ 999.999 Hz	1 mHz		
1.000 00 kHz ≤ F ≤ 9.999 99 kHz	10 mHz		
10.000 0 kHz ≤ F ≤ 99.999 9 kHz	0.1 Hz		
100.000 kHz ≤ F ≤ 999.999 kHz	1 Hz		
1.000 00 MHz ≤ F ≤ 2.000 00 MHz	10 Hz		

Note [1]: The output type is TTL level.

6.10 Thermocouple Output and Measurement (optional)

Type	Range (°C)		Measurement Uncertainty (k=2) (Tcal±5°C) (°C)	
	Minimum	Maximum	90 Days	1 Year
B	410	600	0.30	0.35
	600	900	0.30	0.32
	900	1800	0.28	0.31
E	-200	0	0.10	0.11
	0	600	0.07	0.09
	600	1000	0.09	0.10
J	-200	-100	0.12	0.13
	-100	750	0.09	0.10
	750	1200	0.10	0.11
K	-200	-100	0.15	0.20
	-100	1000	0.10	0.11
	1000	1370	0.12	0.13
N	-200	-100	0.20	0.25
	-100	400	0.12	0.13
	400	1300	0.10	0.12
R	-50	50	0.30	0.40
	50	300	0.28	0.32
	300	1000	0.22	0.23
	1000	1750	0.25	0.26
S	-50	50	0.30	0.40
	50	300	0.31	0.34
	300	1000	0.24	0.25
	1000	1750	0.22	0.23
T	-200	100	0.17	0.25
	-100	0	0.08	0.11
	0	400	0.08	0.09

Note [1]: Resolution: 0.01 °C

Note [2]: Output source internal resistance: 10 Ω

Note [3]: Does not include thermocouple error

Note [4]: When using external compensation, S, R, B, K, N, E, J, T conform to the ITS-90 international temperature scale.

6.11 RTD Output(optional)

Type	Range (°C)		Measurement Uncertainty (k=2) (Tcal±5°C) (°C)	
	Minimum	Maximum	90 Days	1 Year
Pt385, 100 Ω	-200	0	0.05	0.05
	0	300	0.08	0.08
	300	850	0.12	0.12
Pt385, 200 Ω	-200	250	0.04	0.04
	250	630	0.10	0.15
Pt385, 500 Ω	-200	-30	0.36	0.40
	-30	630	0.10	0.11
Pt385, 1000 Ω	-200	0	0.027	0.03
	0	300	0.054	0.06
	300	600	0.063	0.07
Cu50	-50	150	0.09	0.10
Cu100	-50	150	0.045	0.05

- [1] Resolution: 0.001 °C

7. General Specifications

ssMaximum power consumption	500 VA
Warm up time	Twice the time since last warmed up, to a maximum of 30 minutes.
Temperature performance	Operating temperature: 0°C ~ 50°C Calibration temperature: 15°C ~35°C Storage temperature: -20°C~70°C
Humidity performance	Operating humidity: <80% @ 30°C, <70% @ 40°C, <40% @ 50°C Storage humidity: <95%, No condensation
Communication interface	RS232×1, USB×1, LAN×1
Dimensions	444 mm(W)× 510 mm (D) × 205 mm (H), Handles and feets excluded.

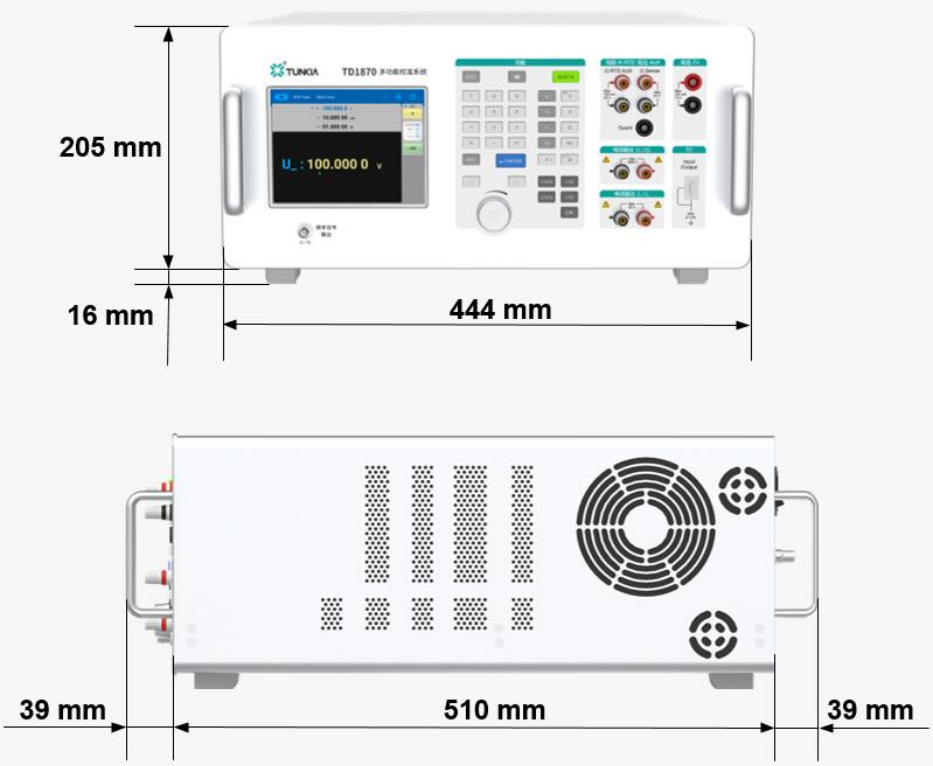

8. Ordering Information

TD1870 X

Models	
X = A	**Basic**
X = B	**Standard**

Function	TD1870A	TD1870B
AC/DC voltage source (U)	★	★
AC/DC current source (I)	★	★
Simulated DC resistance (R)	★	★
AC/DC power output (P)	★	★
Square wave frequency output (F⎍)	★	★
Simulated TC output &TC measurement(TC)	—	★
Simulated RTD output (RTD)	—	★

9. Accessory List

S/N	Pic	Name	Specification	Qty	Remark
1		Voltage Test Leads	1.5m / 2.1mm^2 / Φ4-Φ4 safety banana plug	Red 2 Black 2	Standard accessory
2		20A Current Test Lead	1.5m / 6mm^2 / Φ4-Φ4 safety banana plug	Red 1 Black 1	Standard accessory
3		Current Shorting Wire	0.18m / 1.6mm2 / Φ4-Φ4 safety banana plug	Red 1 Black 1	Standard accessory
4		Low Thermal EMF Voltage Test Leads	0.6m, Φ8 thin blade terminal	1	Standard accessory
5		High Resistance Test Leads	6-in-1	1	Standard accessory
6		Alligator Clips	Full sheath / Φ4 jack	Red 2 Black 2	Standard accessory
7		Pin Adapter	Φ2*18mm / Φ4 jack	Red 2 Black 2	Standard accessory

S/N	Pic	Name	Specification	Qty	Remark
8	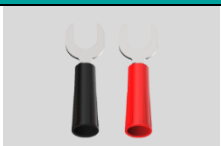	U-shaped Blade Terminal	Φ8 thin blade terminal / Φ4 jack	Red 3 Black 3	Standard accessory
9		Frequency Test Leads	BNC male to alligator clip	1	Standard accessory
10	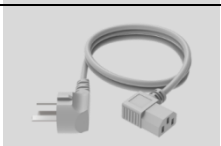	Power Cable	AC 220V, 10A	1	Standard accessory
11		Packing Box	Paper packaging box	1	Standard accessory

S/N	Pic	Name	Specification	Qty	Remark
1	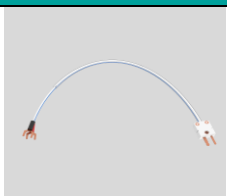	Thermocouple Test Leads	0.6m, TC head to Φ4 blade terminal	1	Thermocouple output function option

Note: If the user specifies the function selection in the order contract, the corresponding accessories will be shipped by default.

For example: TD1870-B has a thermocouple output function and the delivery list includes a thermocouple test lead.

S/N	Pic	Name	Specification	Qty	Remark
1		Current Coil	20 A / 50 T	1	Clamp meter calibration options
2		Current Test Leads	1.5m / 16mm2 / Φ12-Φ12 blade terminal	Red 1 Black 1`	
3		Calibration software	Card USB	1	Software options
4		Communication Line	1.8m / USB to RS232 (DB9 female)	1	

Note: The above accessories need to be purchased separately and must be specified in the order contract.